AV1508

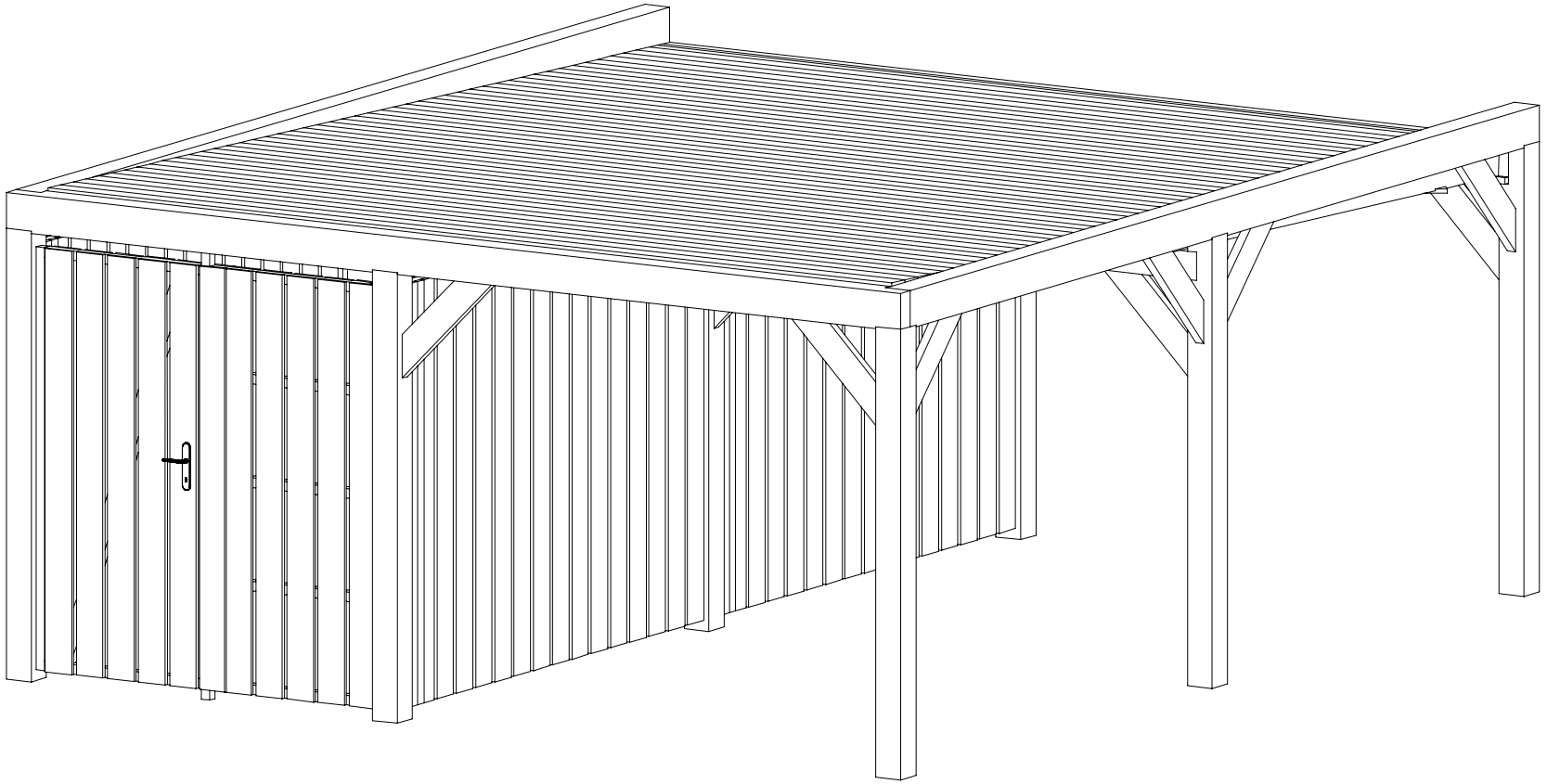

COLUMN PLAN

AV1508

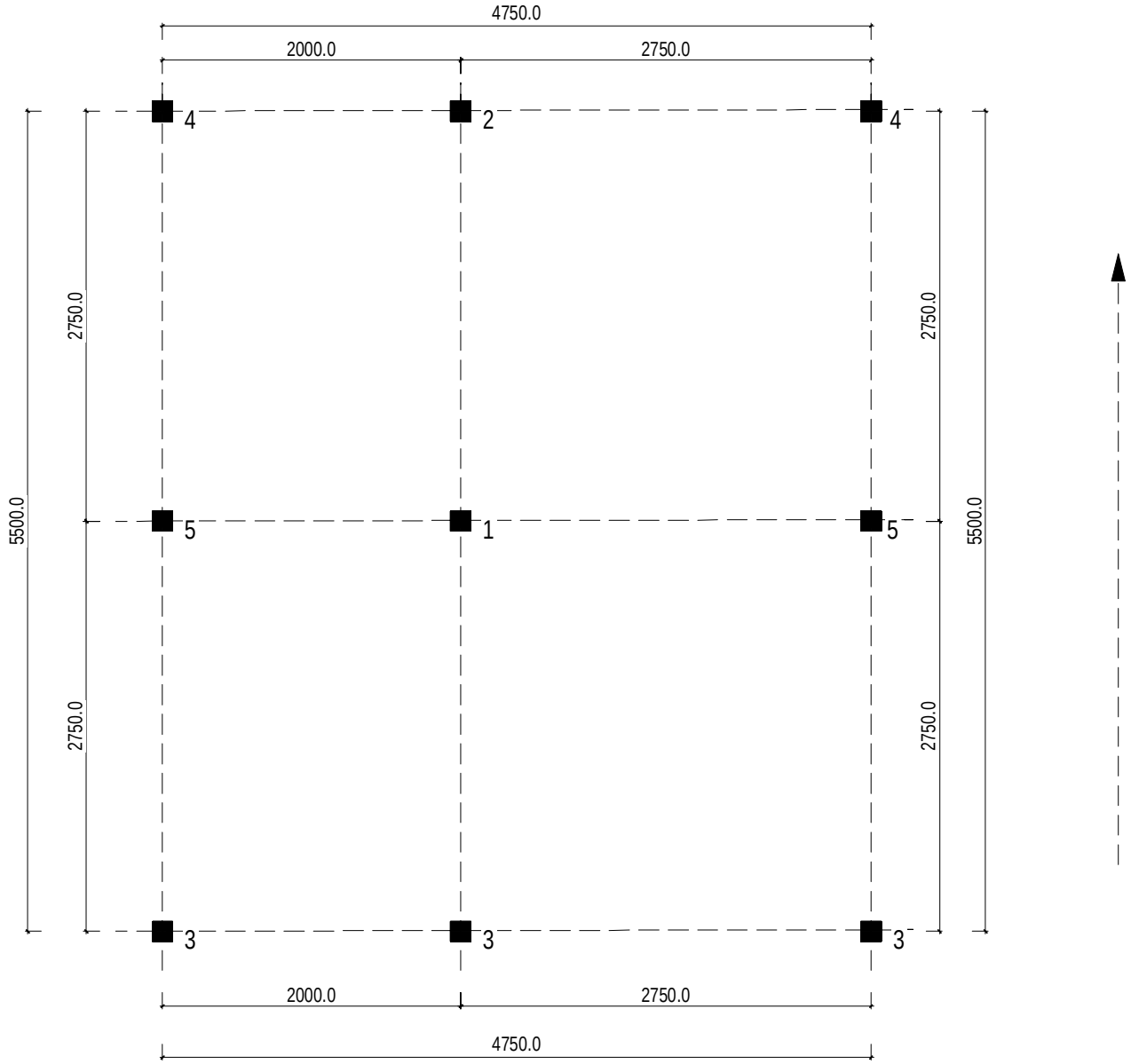

COLUMN + JOIST

AV1508

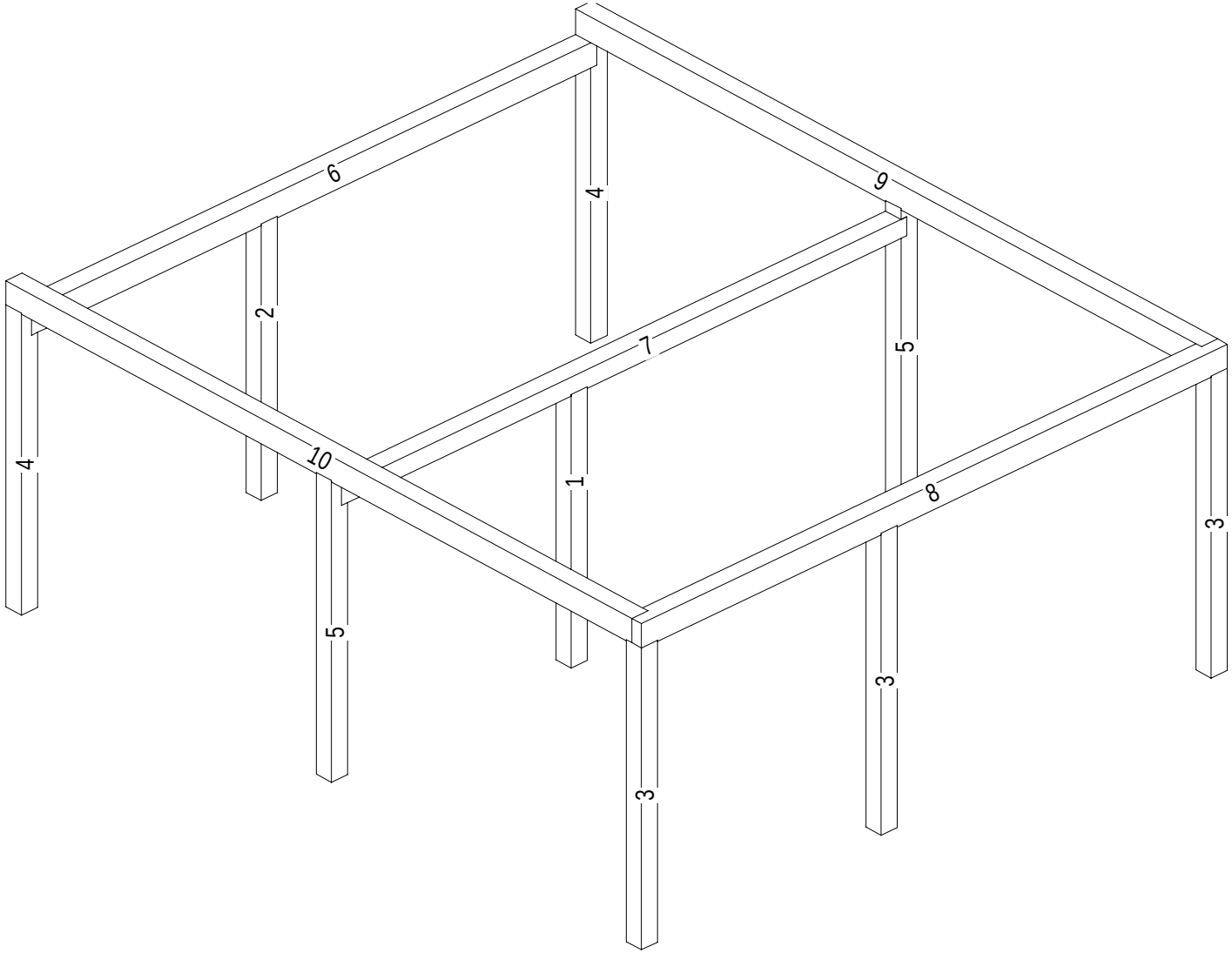

RAFTERS

AV1508

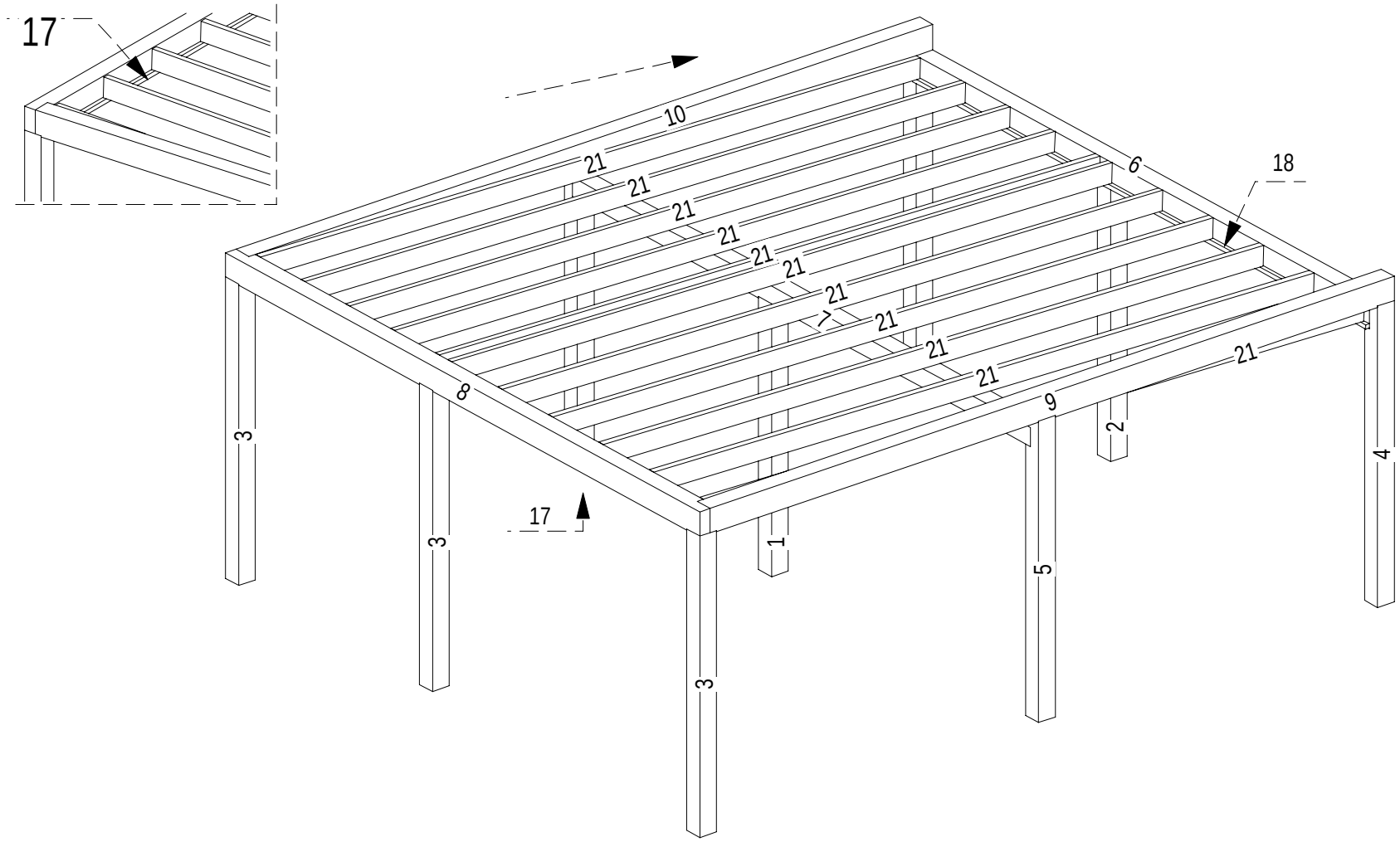

21	5361.1mm	45.0mm	145.0mm	11

RAFTER PLAN

AV1508

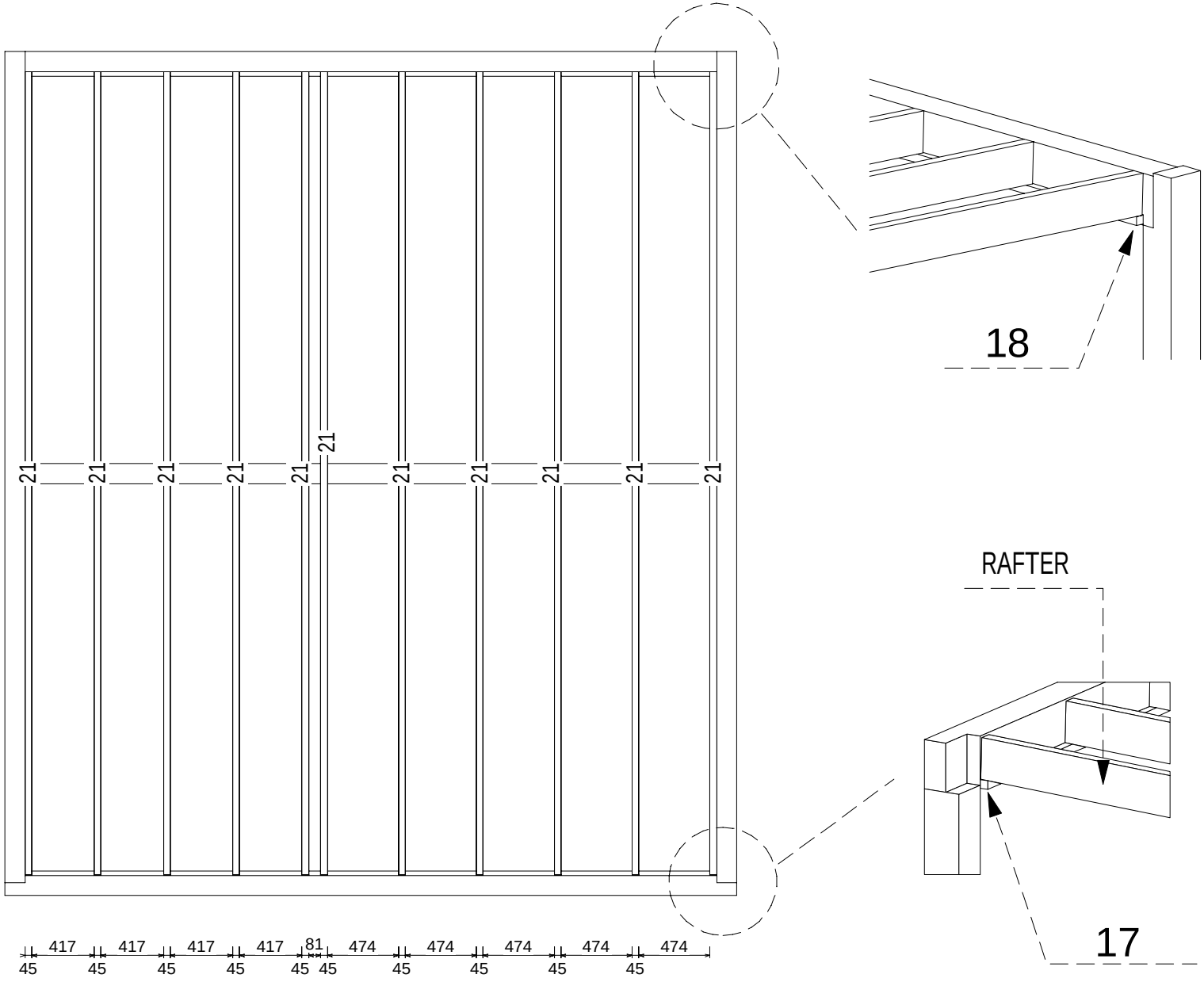

AV1508

ROOF BOARDS

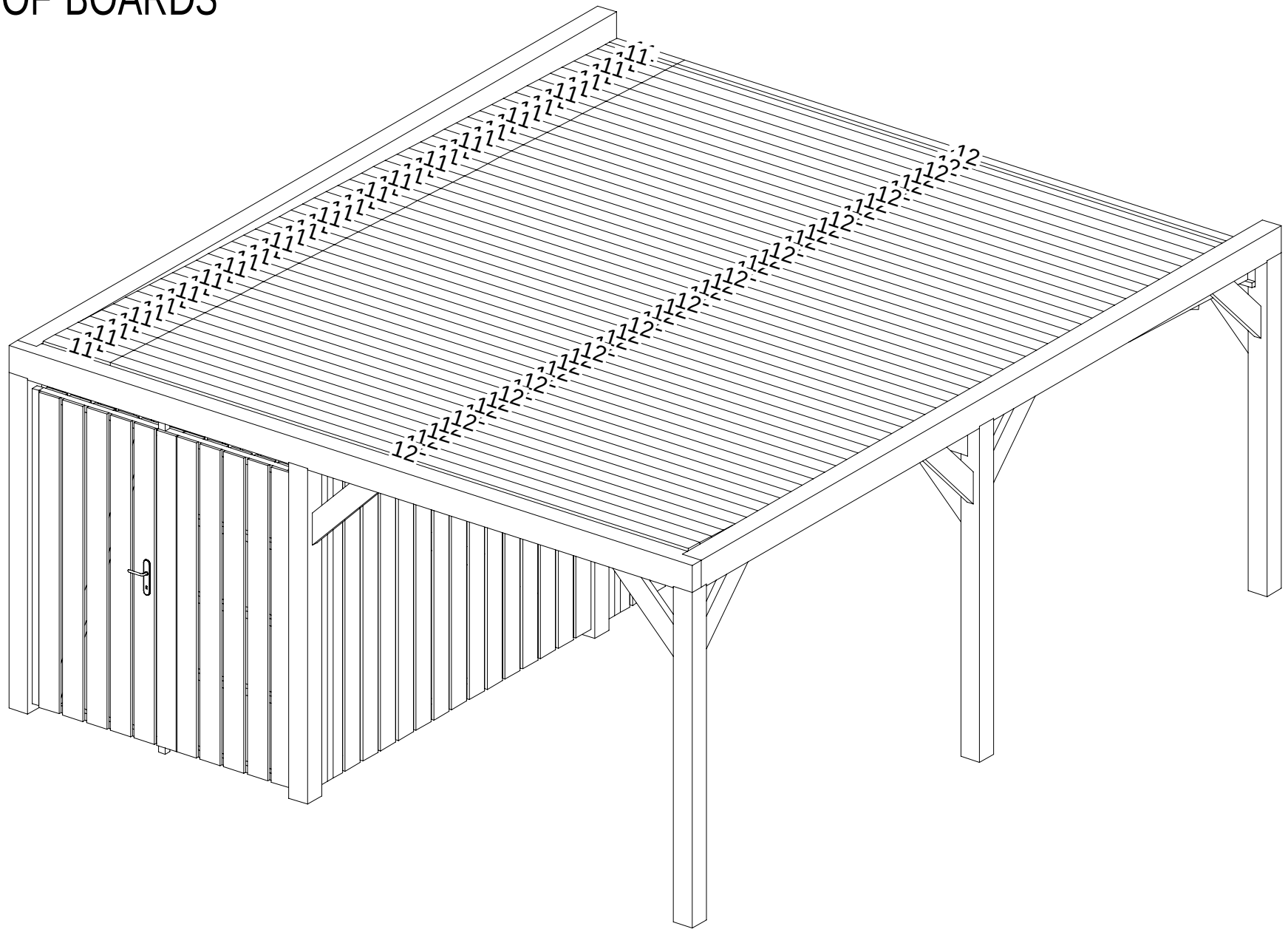

AV1508

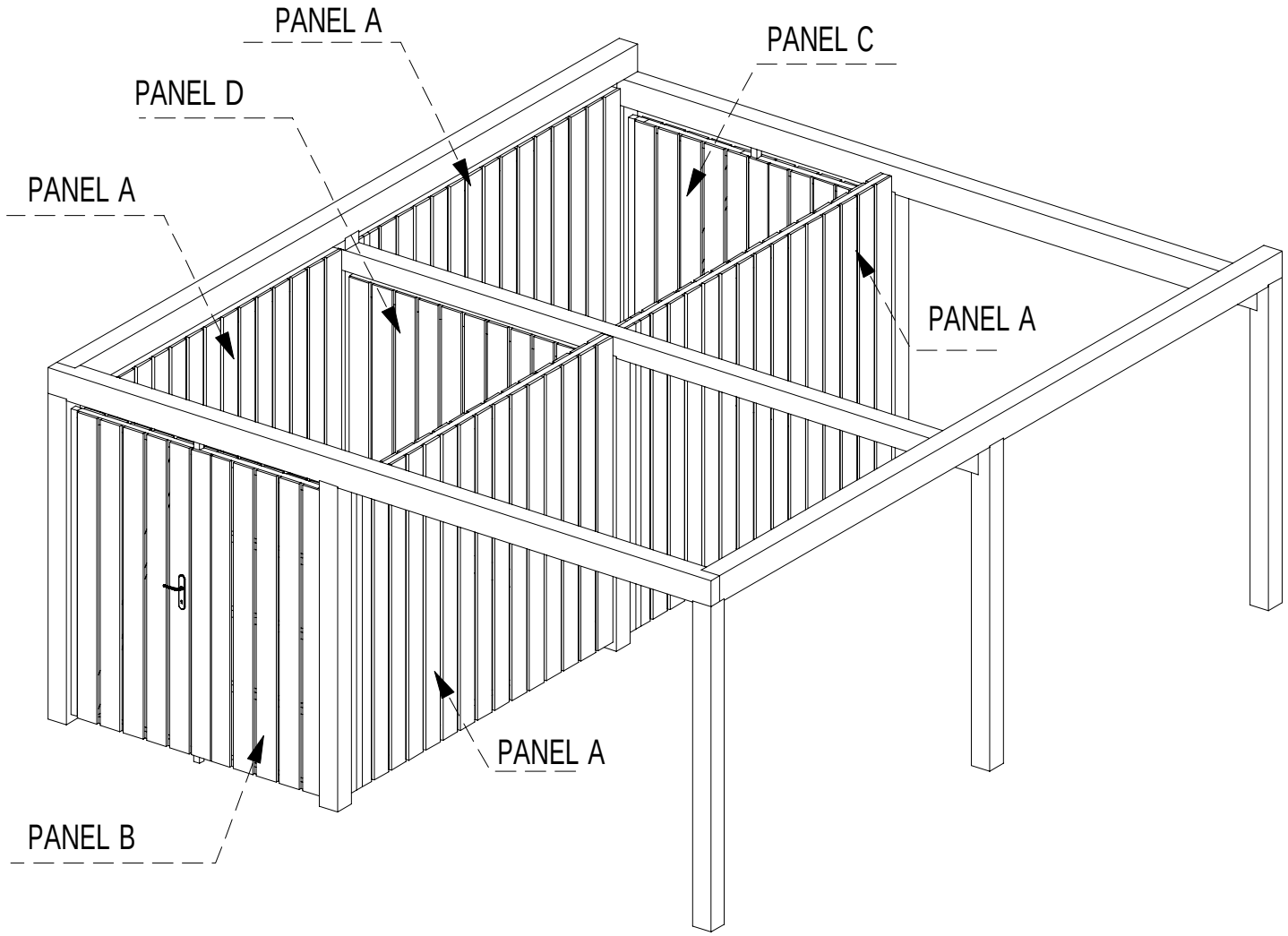

PANEL A, x4pcs

Luna AV1508

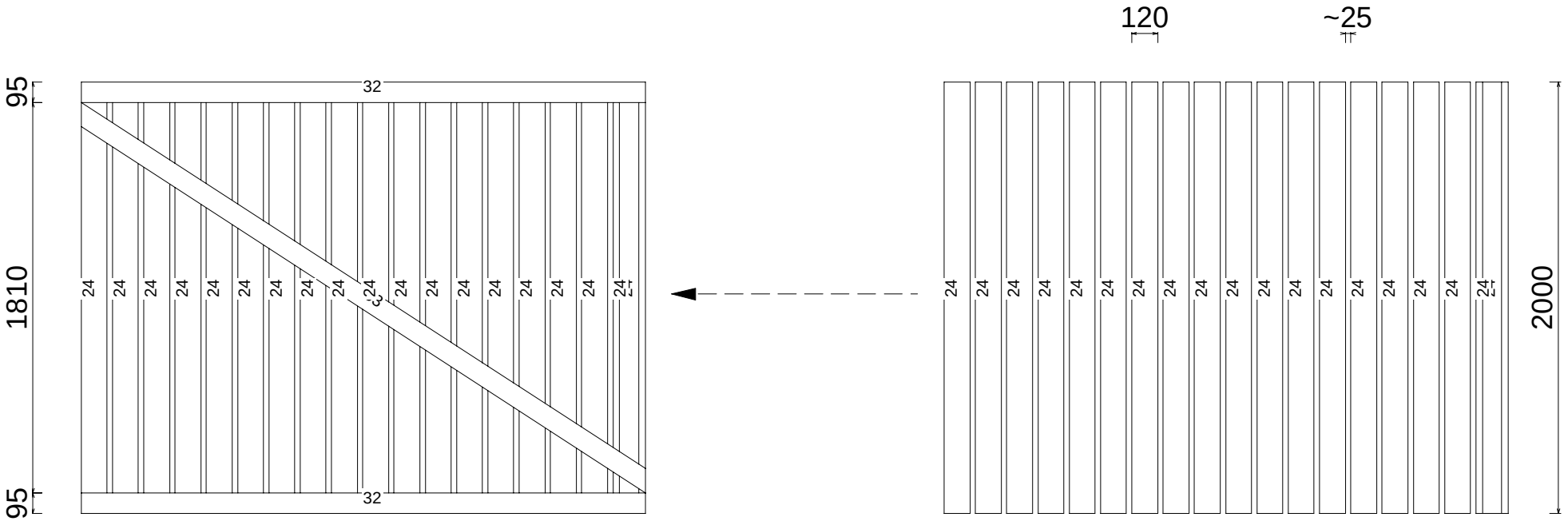

TOP VIEW

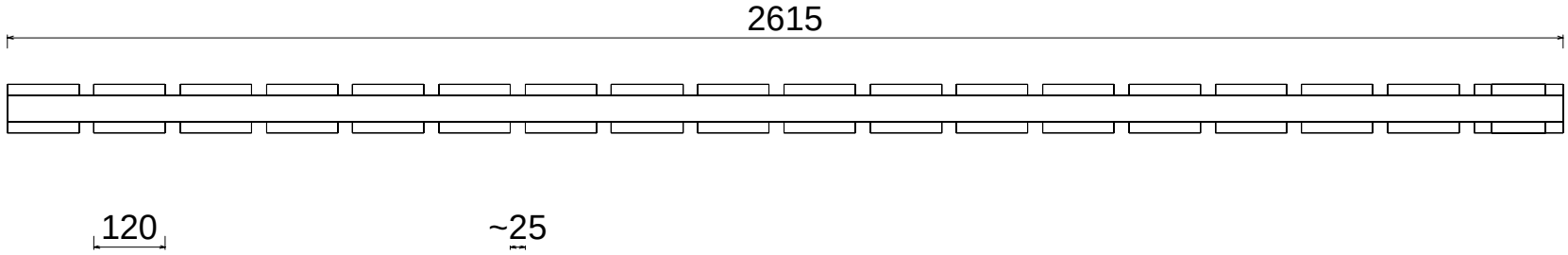

PANEL B + DOOR

Luna AV1508

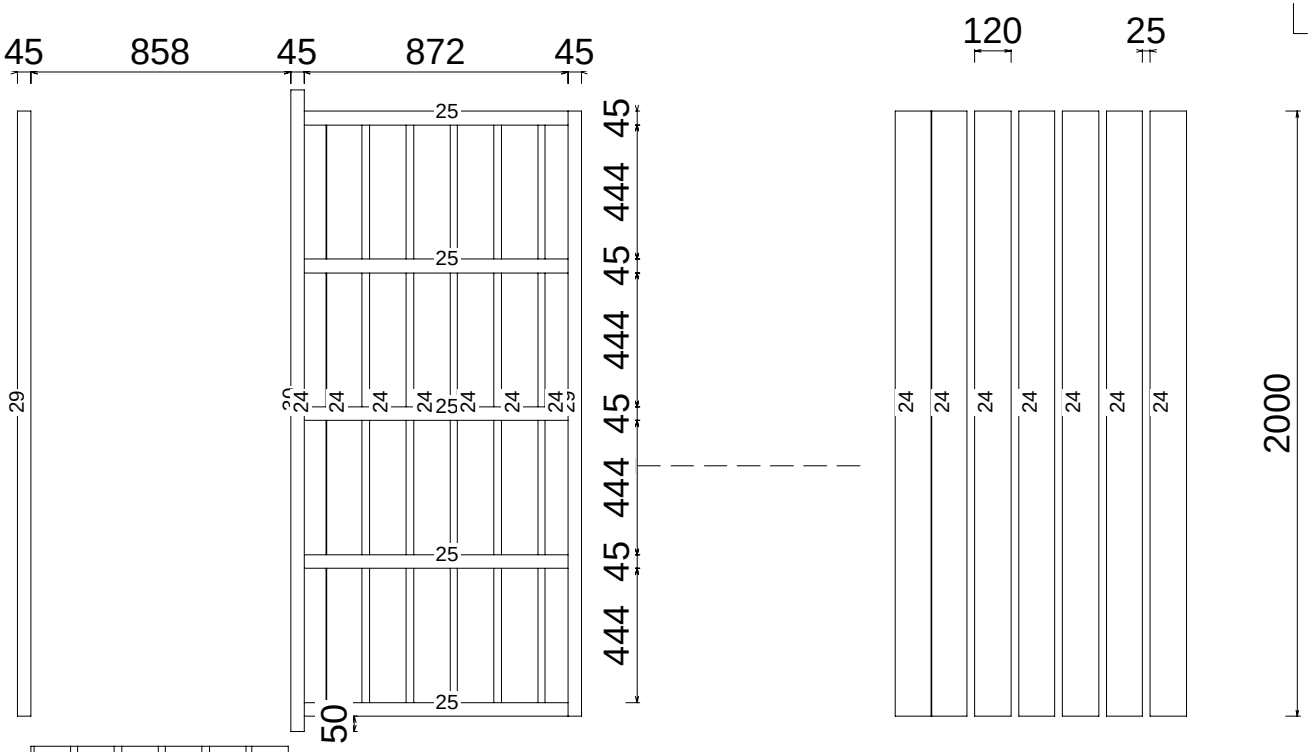

Luna AV1508

PANEL C + DOOR

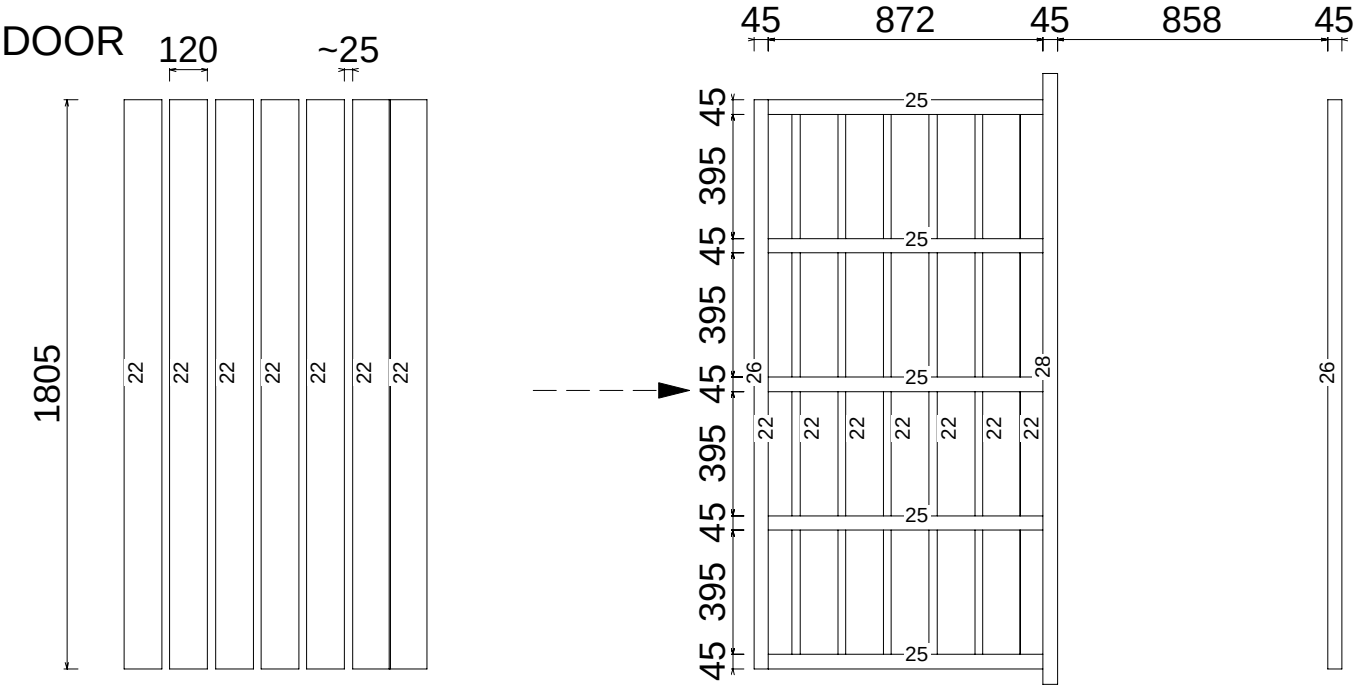

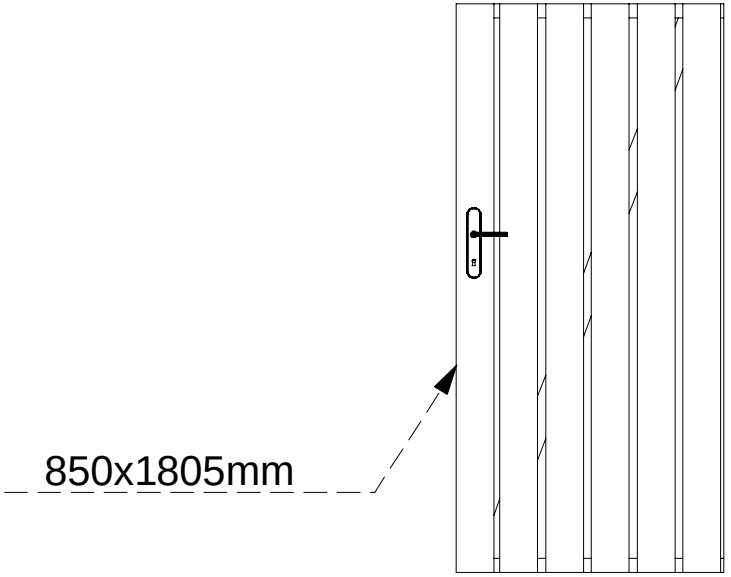

PANEL D

Luna AV1508

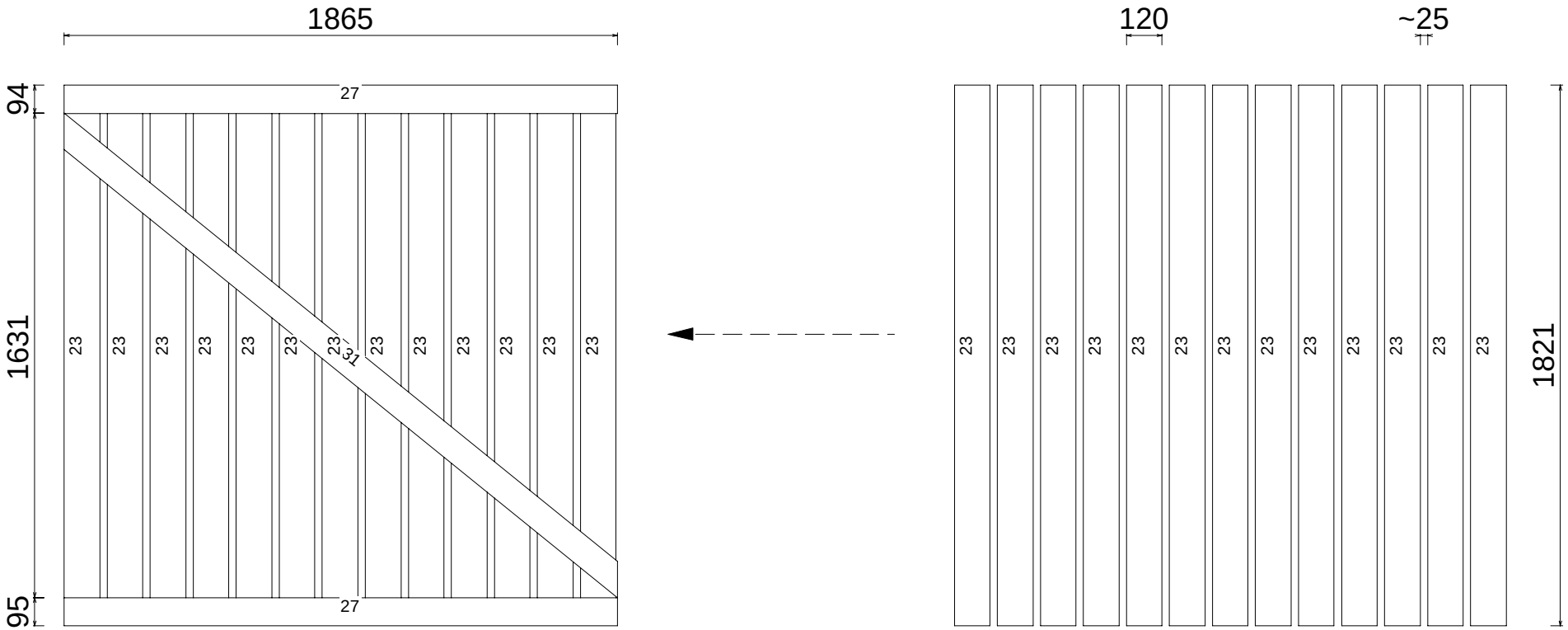

TOP VIEW

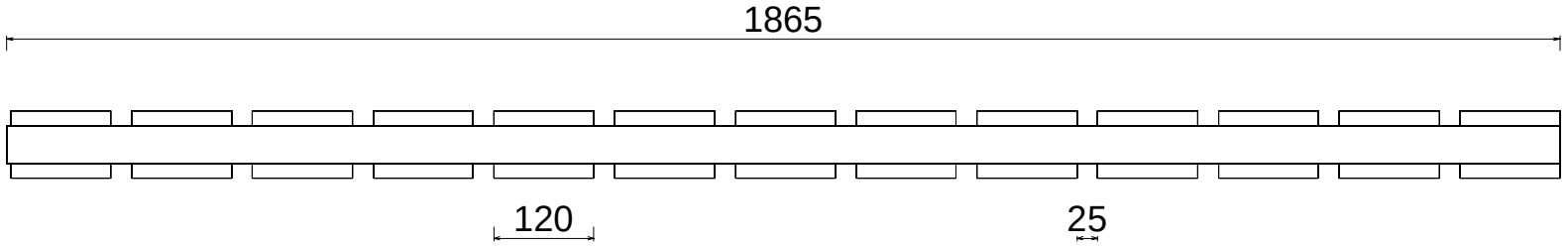

AV1508

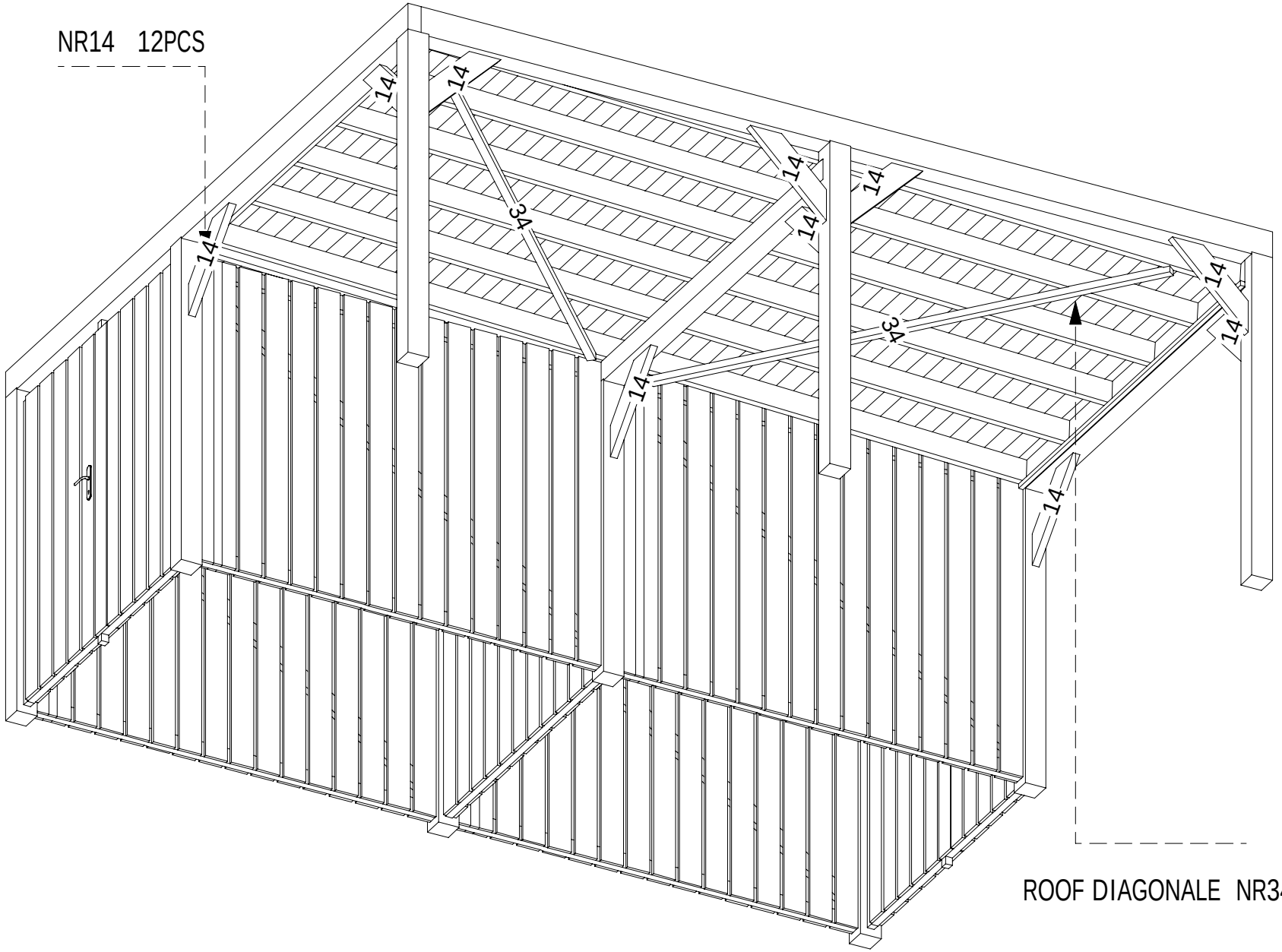
NR14 12PCS
14
14
14
14
14
14
14
14
14
34
34
ROOF DIAGONALE NR34 X2

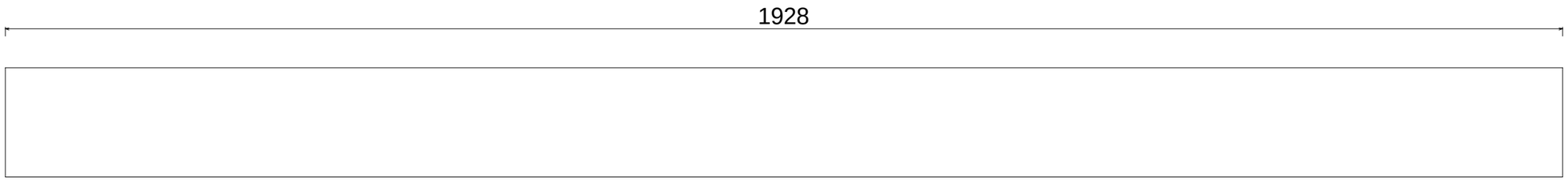

Pos
1

Name: COLUMN
PCS: 1

B/H: 135.0mm x 135.0mm
LENGHT 1927.9mm

Date 06/07/2024
Projekt: LUNA F PLUS 4,9X5,6
scale 1:6

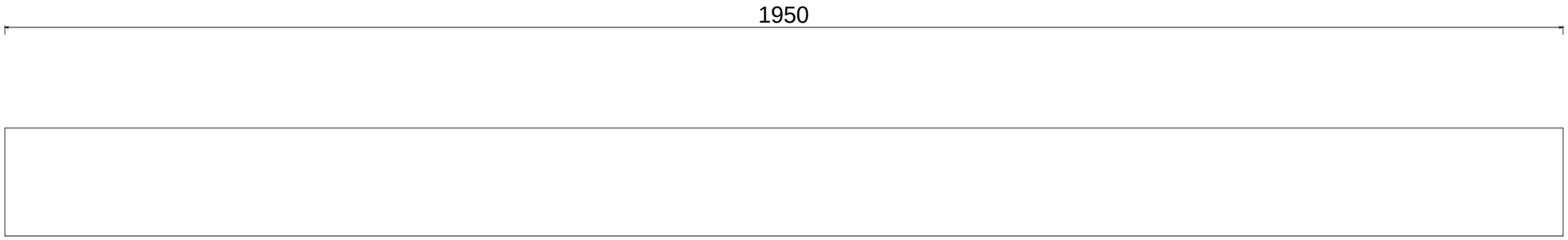

Pos
2

Name: COLUMN
PCS: 1

B/H: 135.0mm x 135.0mm
LENGHT 1950.0mm

Date 06/07/2024
Projekt: LUNA F PLUS 4,9X5,6
scale 1:6

Pos
3

Name: COLUMN
PCS: 3

B/H: 135.0mm x 135.0mm
LENGHT 2130.0mm

Date 06/07/2024
Projekt: LUNA F PLUS 4,9X5,6
scale 1:6

BOTTOM VIEW

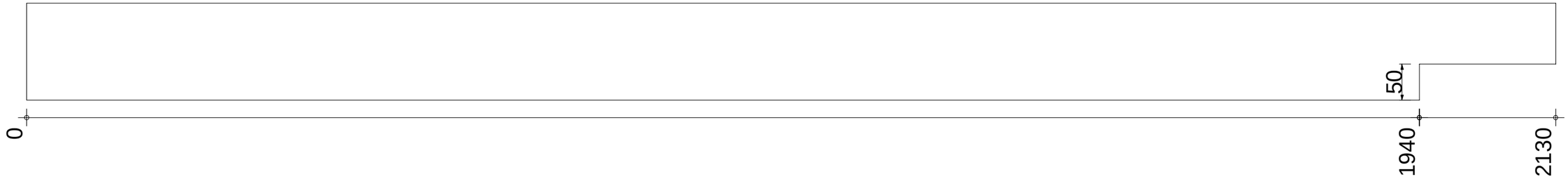

FRONT VIEW

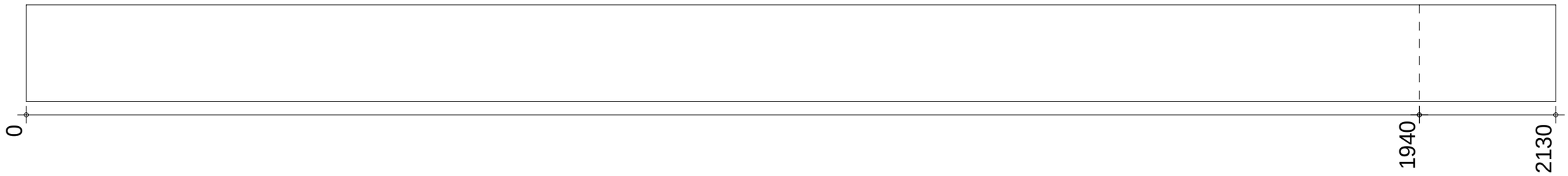

TOP VIEW

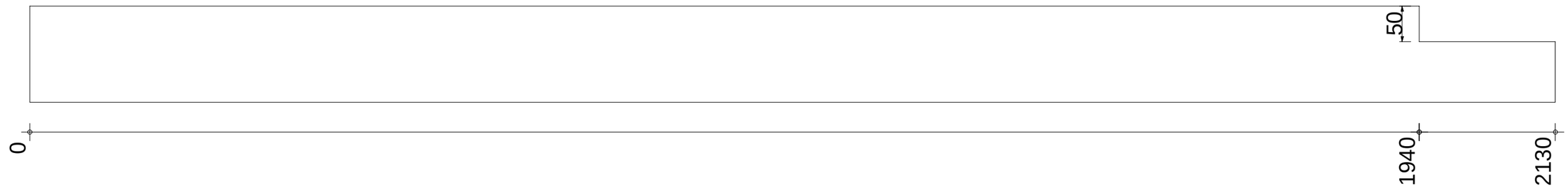

Pos					
4	Name:	COLUMN	B/H:	135.0mm x 135.0mm	Date 06/07/2024
	PCS:	2	LENGHT	2130.0mm	Projekt: LUNA F PLUS 4,9X5,6
					scale 1:6

BOTTOM VIEW



FRONT VIEW

TOP VIEW

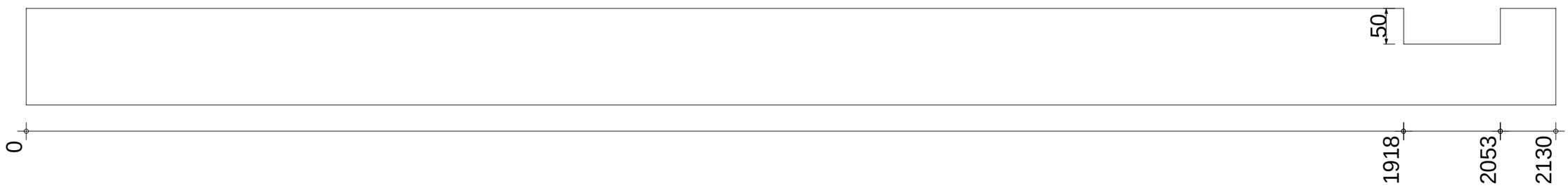

Pos 5	Name: COLUMN	B/H:	135.0mm x 135.0mm	Date	06/07/2024
	PCS: 2	LENGHT	2130.0mm	Projekt:	LUNA F PLUS 4,9X5,6
				scale	1:6

BOTTOM VIEW

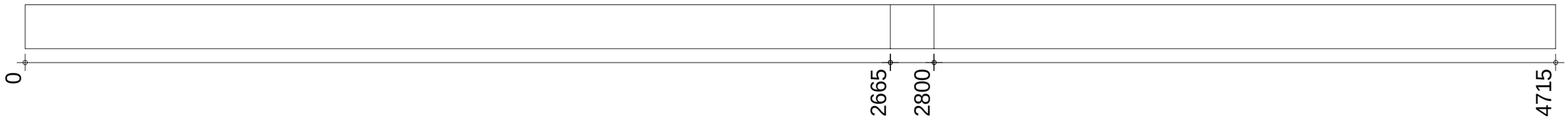

FRONT VIEW



TOP VIEW

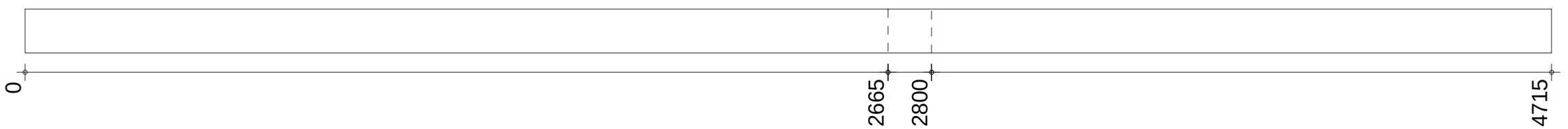

Pos	6				
Name:	JOIST	B/H:	135.0mm x 180.0mm	Date	06/07/2024
PCS:	1	LENGHT	4715.0mm	Projekt:	LUNA F PLUS 4,9X5,6
				scale	1:13

BOTTOM VIEW

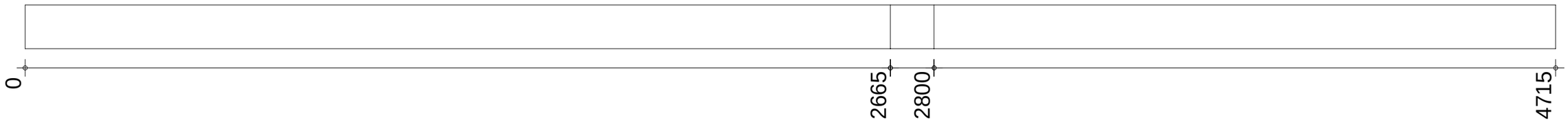

FRONT VIEW

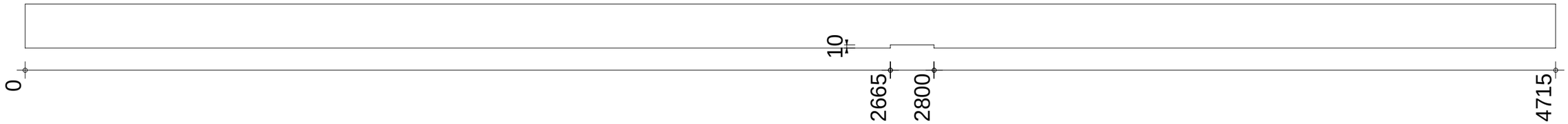

TOP VIEW

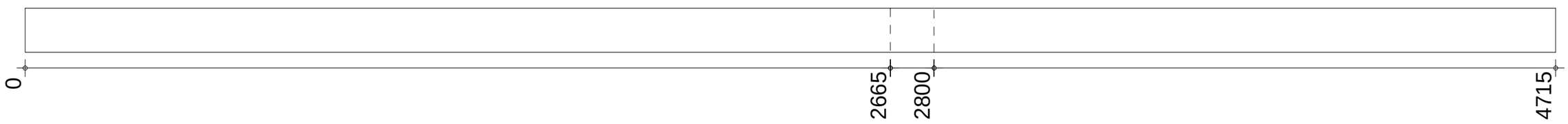

Pos	7				
Name:	JOIST	B/H:	135.0mm x 135.0mm	Date	06/07/2024
PCS:	1	LENGHT	4715.0mm	Projekt:	LUNA F PLUS 4,9X5,6
				scale	1:13

BOTTOM VIEW

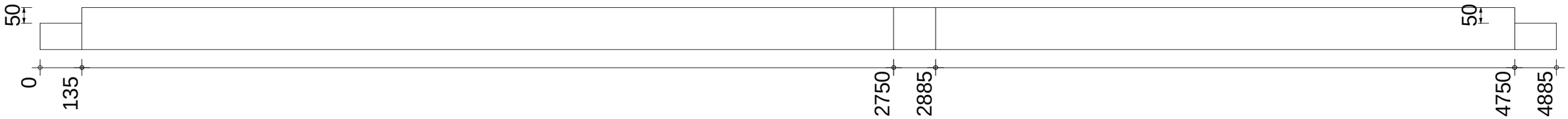

FRONT VIEW

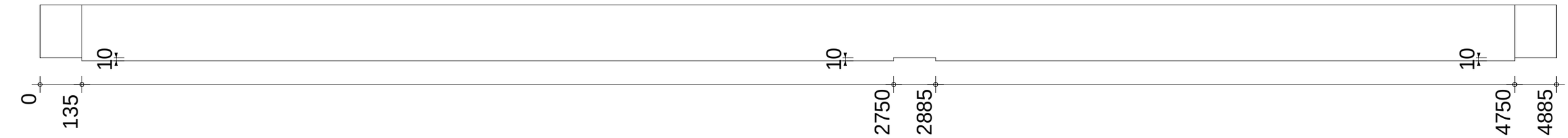

TOP VIEW

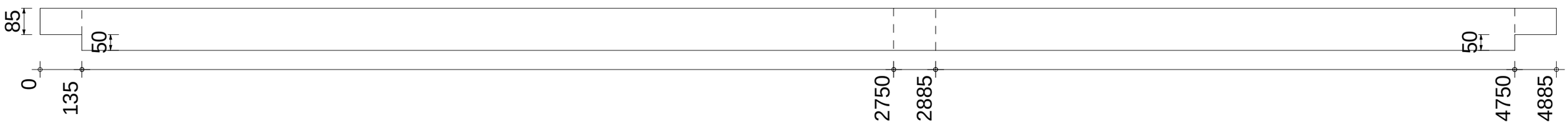

Pos					
8	Name:	JOIST	B/H:	135.0mm x 180.0mm	Date 06/07/2024
	PCS:	1	LENGHT	4885.0mm	Projekt: LUNA F PLUS 4,9X5,6
					scale 1:13

BOTTOM VIEW

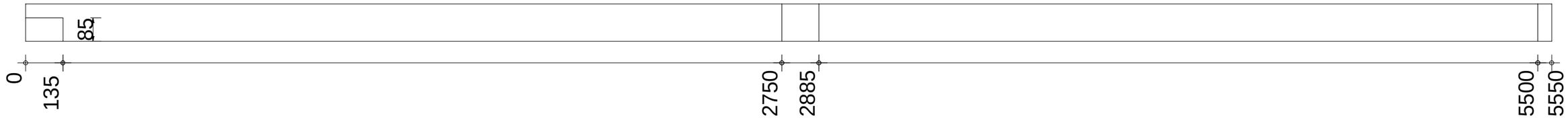

FRONT VIEW

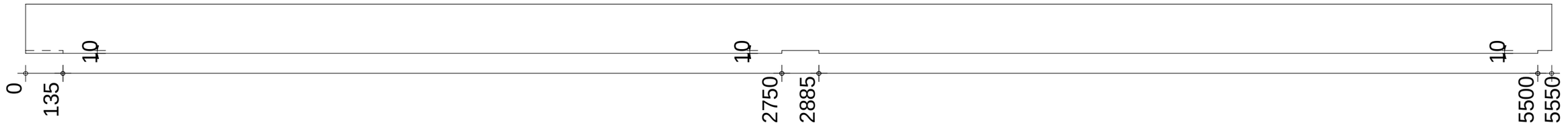

TOP VIEW

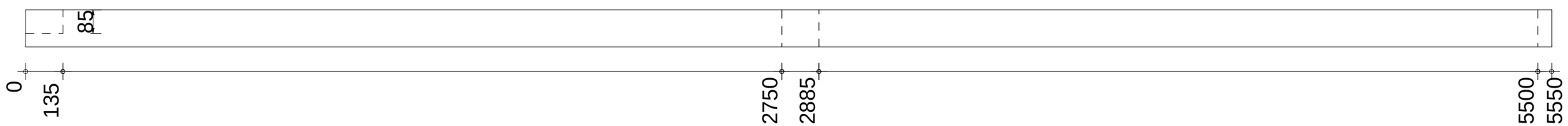

Pos					
9	Name:	JOIST	B/H:	135.0mm x 180.0mm	Date 06/07/2024
	PCS:	1	LENGHT	5550.0mm	Projekt: LUNA F PLUS 4,9X5,6
					scale 1:15

BOTTOM VIEW

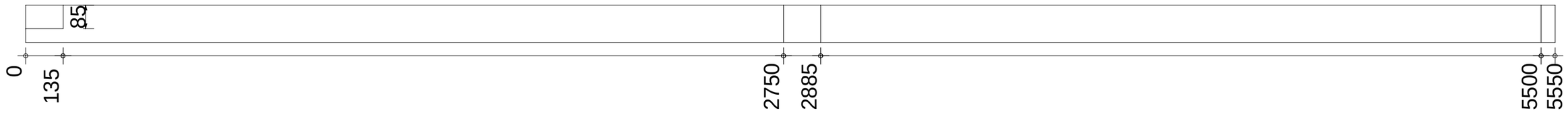

FRONT VIEW

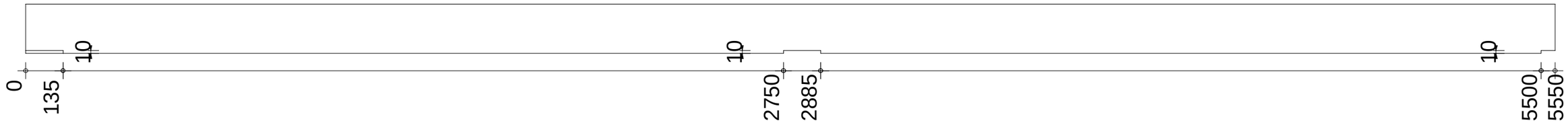

TOP VIEW

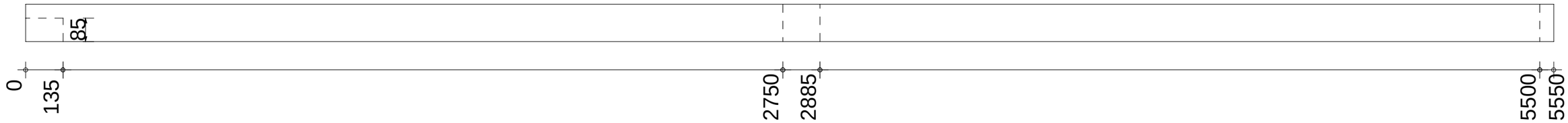

Pos
10

Name: JOIST
PCS: 1

B/H: 135.0mm x 180.0mm
LENGHT 5550.0mm

Date 06/07/2024
Projekt: LUNA F PLUS 4,9X5,6
scale 1:15

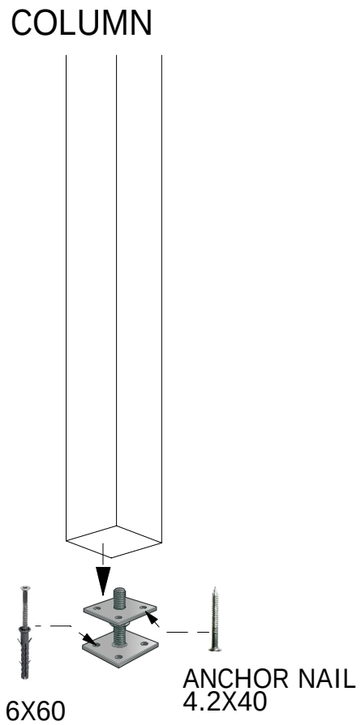
COLUMN
6X60
ANCHOR NAIL
4.2X40

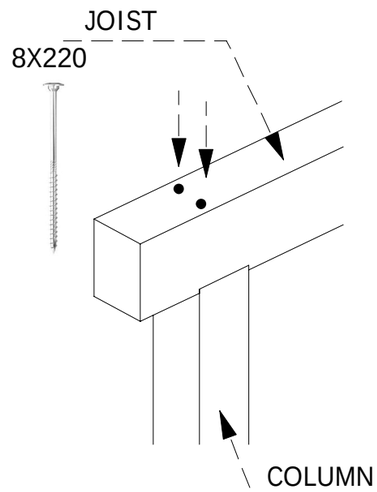
JOIST
8X220
COLUMN

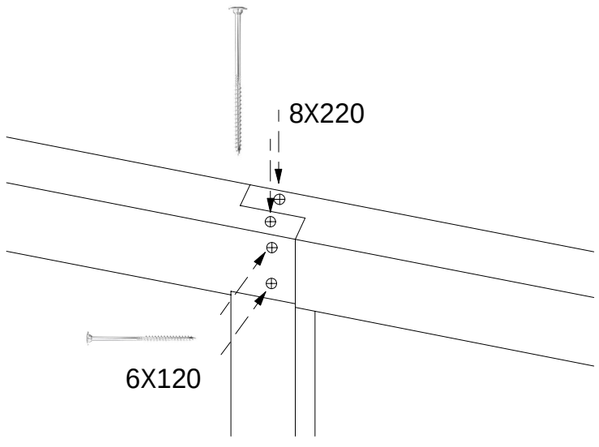
8X220
6X120

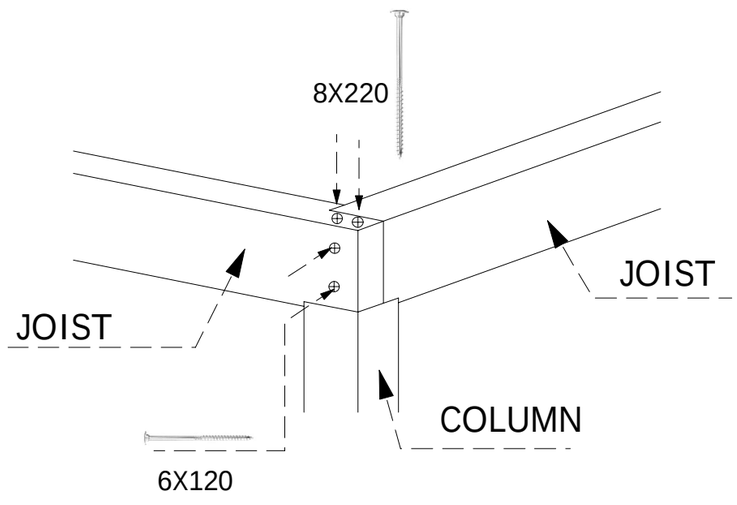
8X220
JOIST
JOIST
COLUMN
6X120

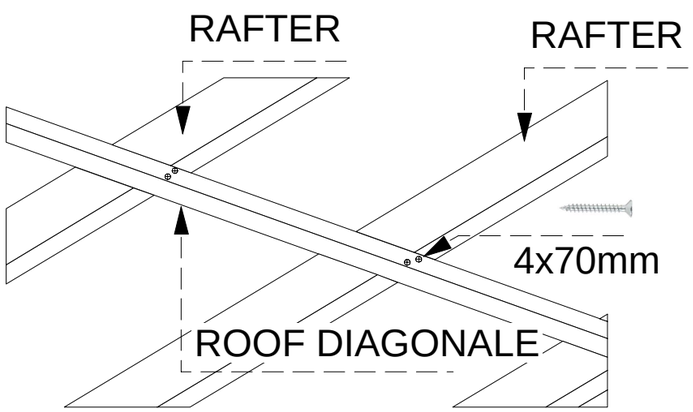

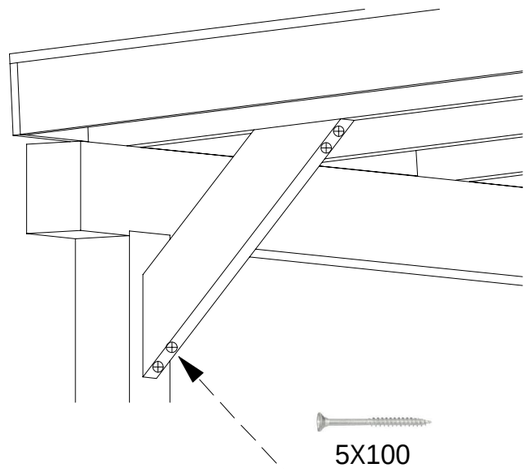

WIND BOARS

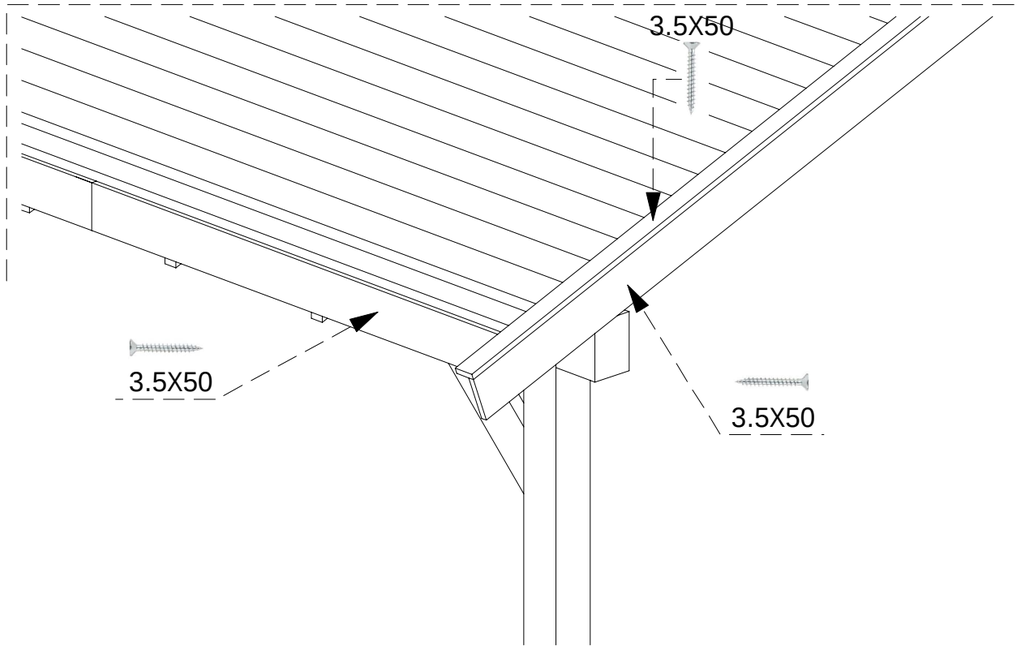

WIND BOARS

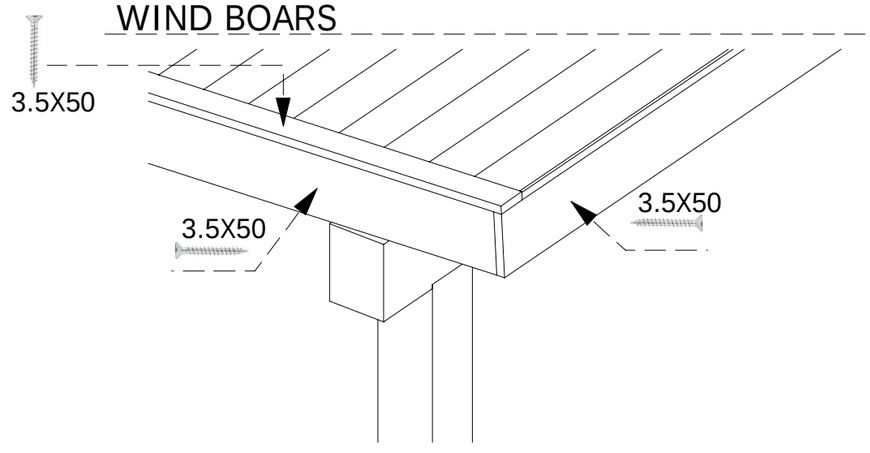

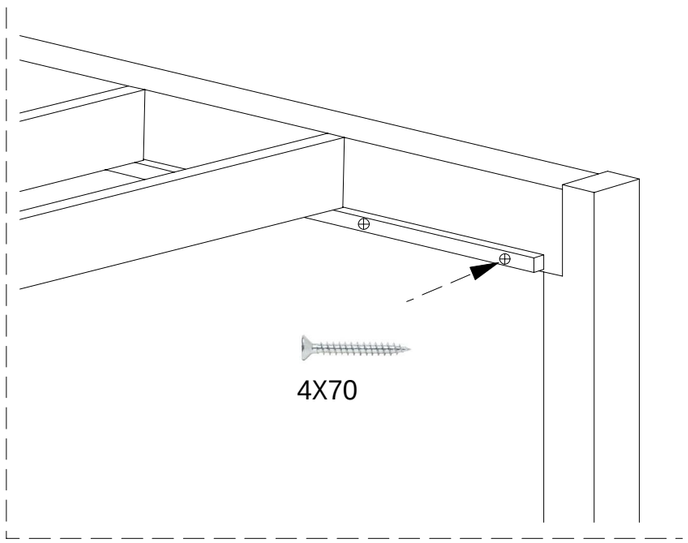
4X70

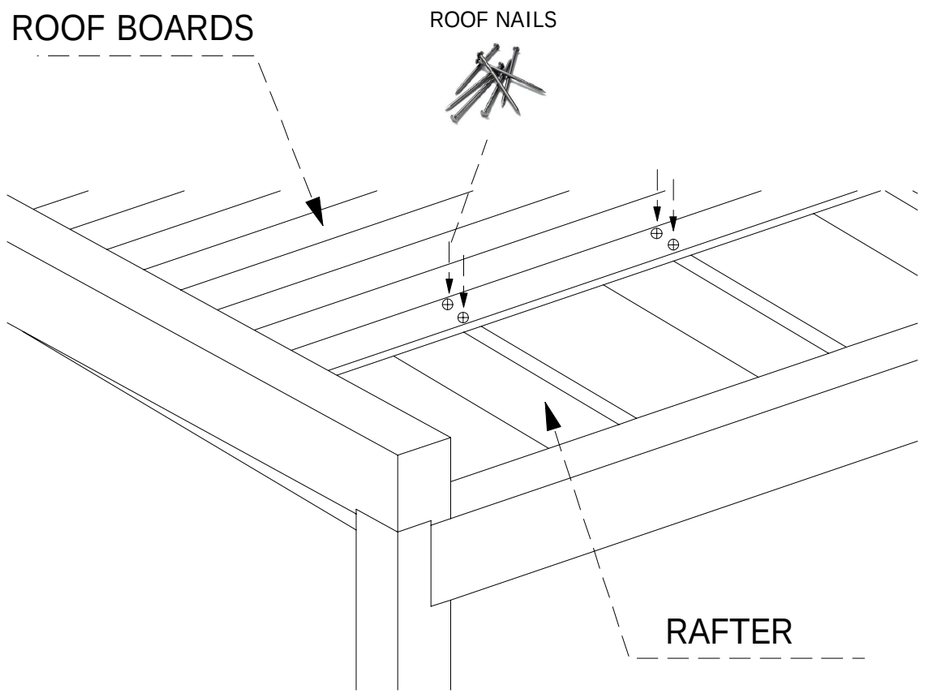
ROOF BOARDS
ROOF NAILS
RAFTER

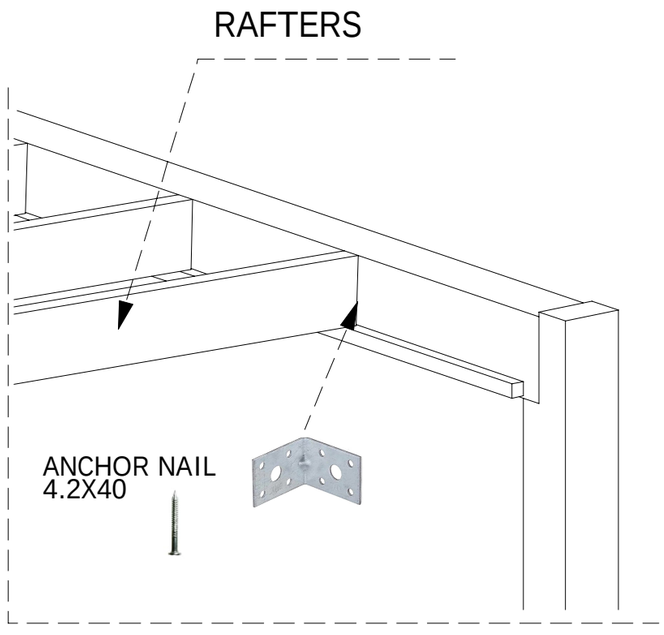
RAFTERS
ANCHOR NAIL
4.2X40

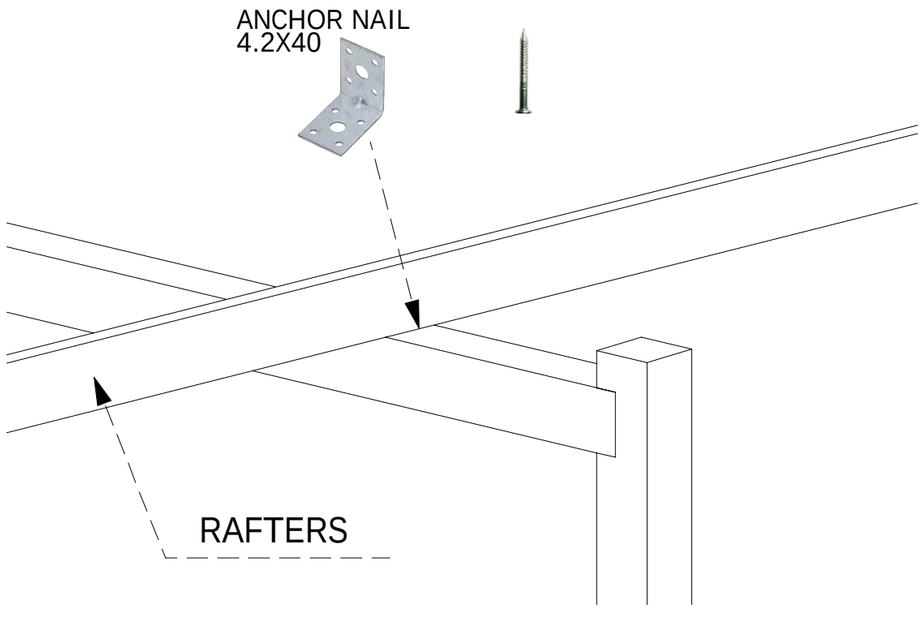
ANCHOR NAIL
4.2X40
RAFTERS

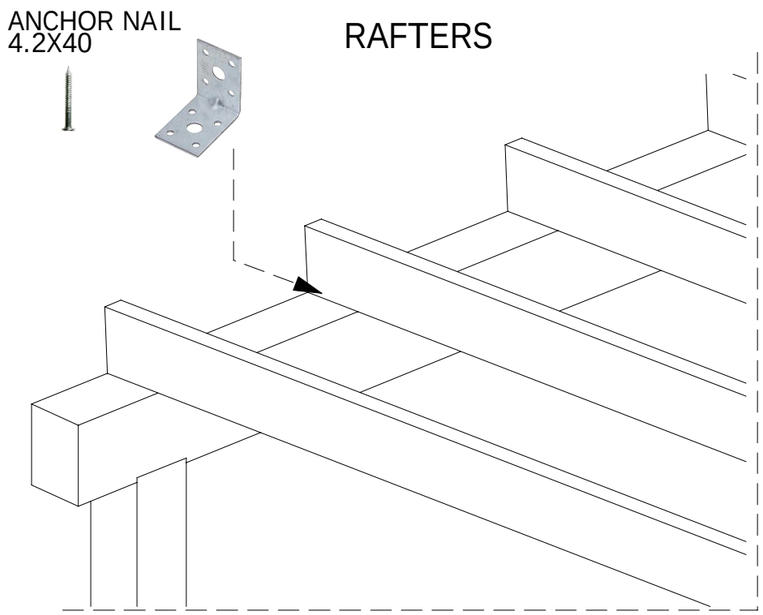
ANCHOR NAIL
4.2X40
RAFTERS

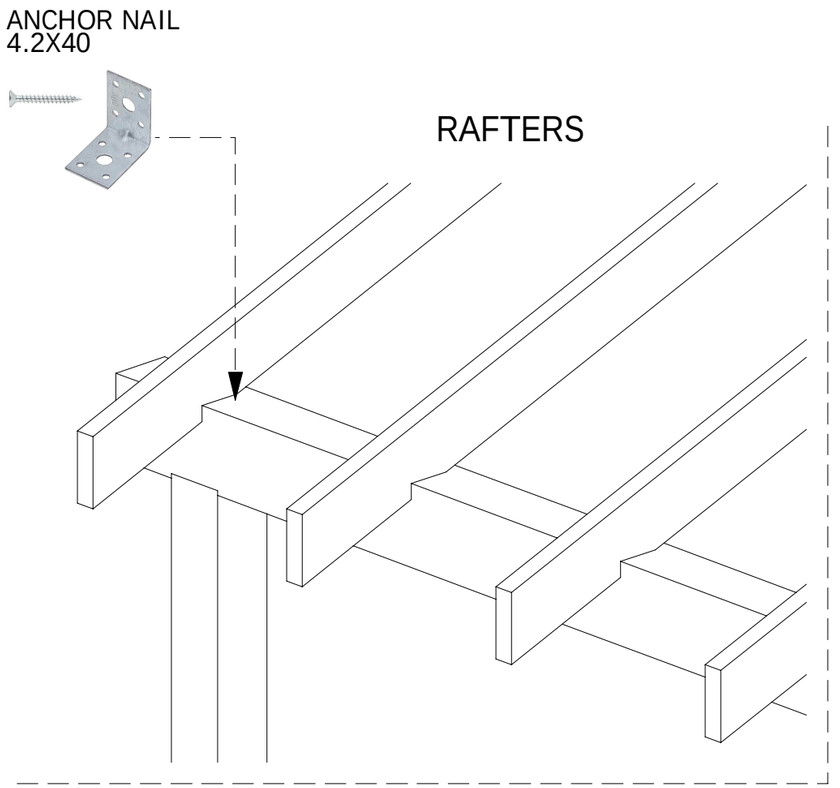
ANCHOR NAIL
4.2X40
RAFTERS

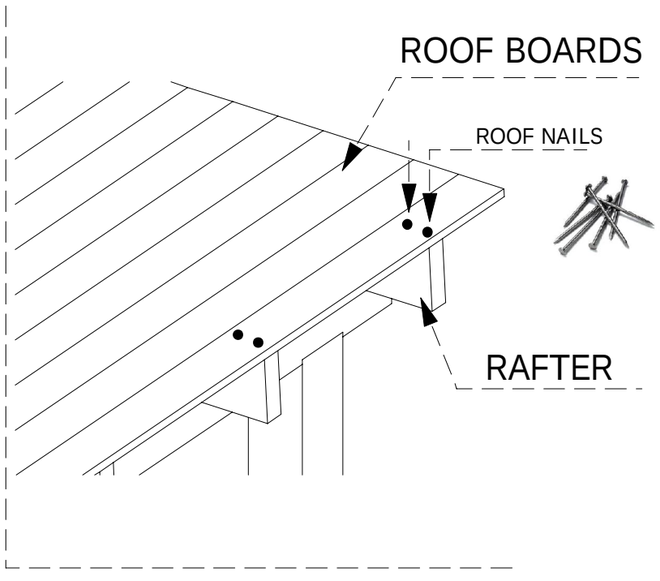
ROOF BOARDS
ROOF NAILS
RAFTER

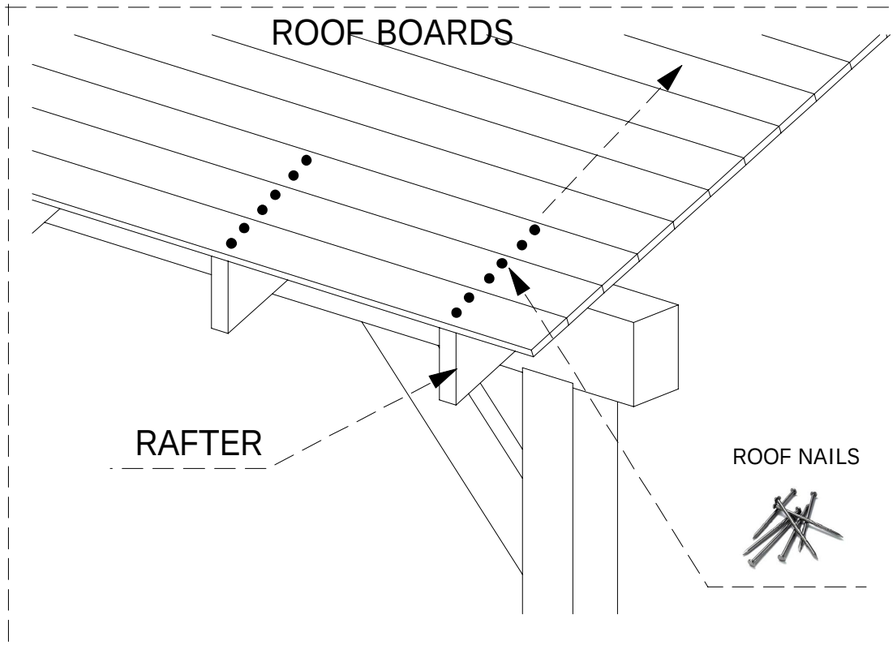
ROOF BOARDS
RAFTER
ROOF NAILS